# MT-B-O2 FL
# MT-B-O2 FL OC
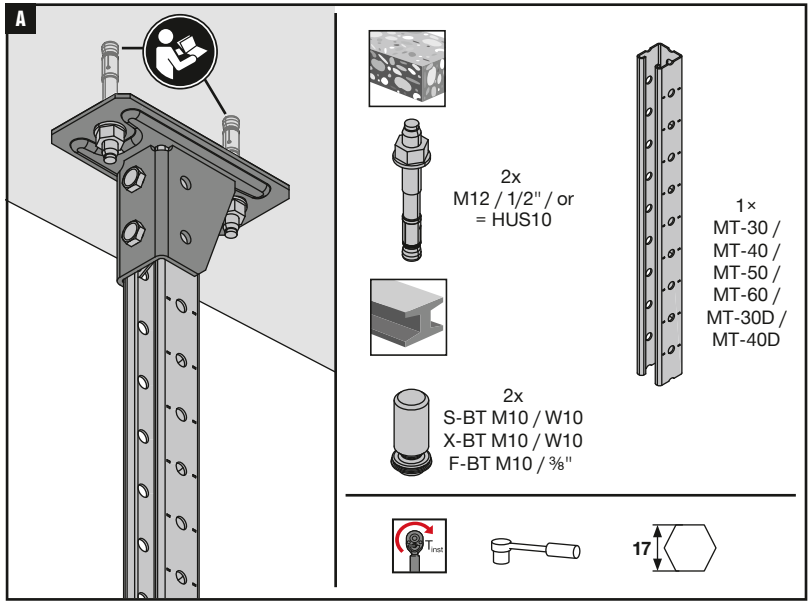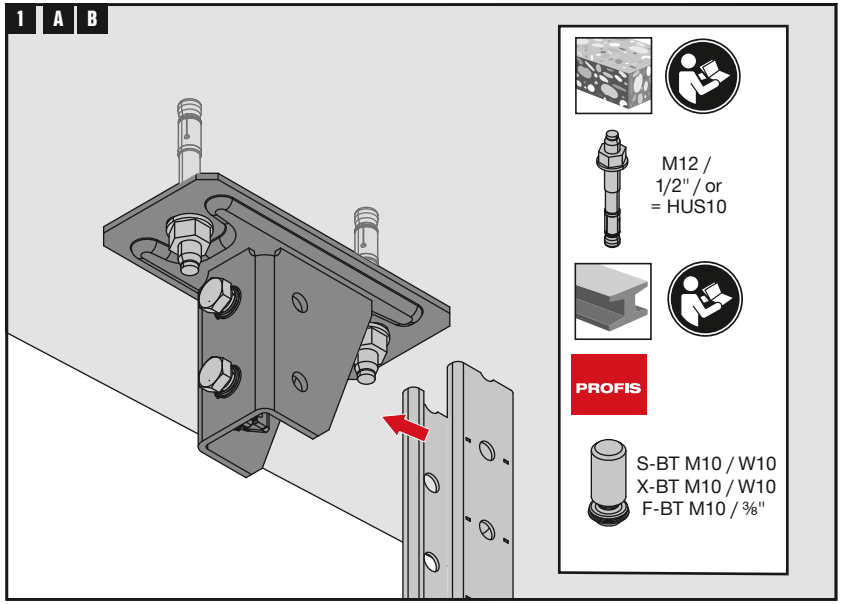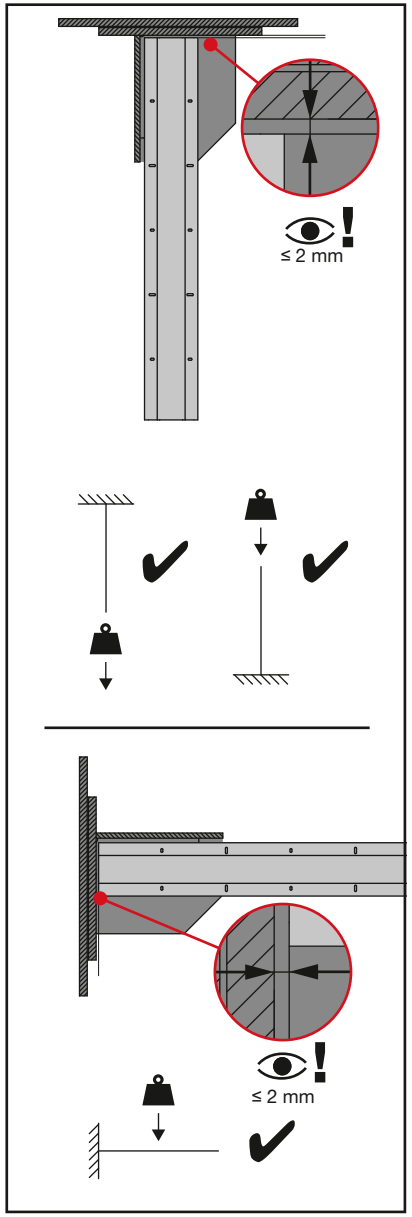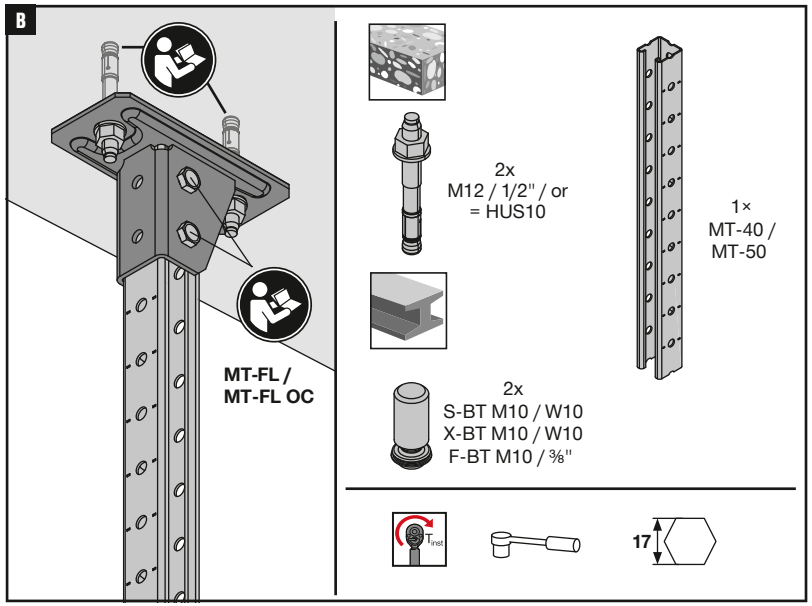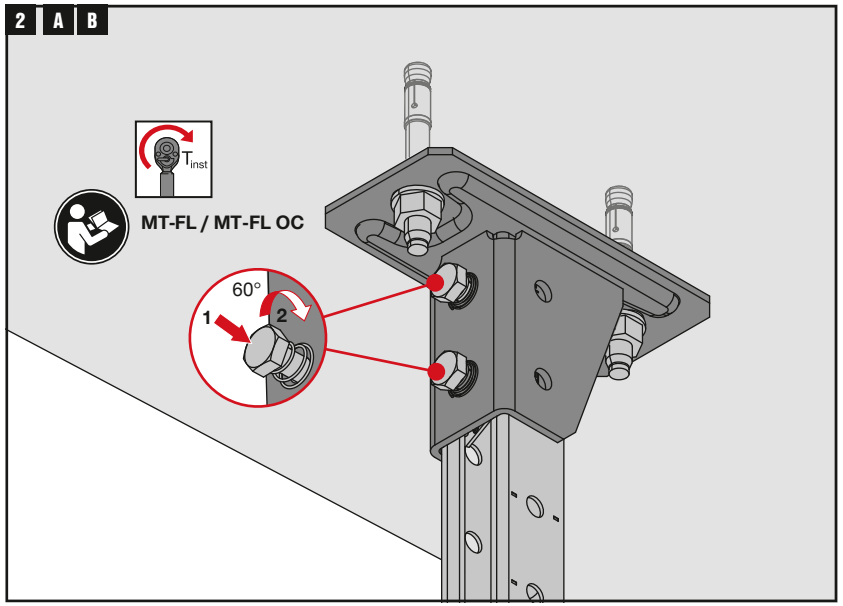
2427437-04.2024